www.linemodule.ru linemodule@ya.ru Тел. (499) 703-36-05

Positioning system ELZZ 60, 60S, 80, 80S, 100, 125

Belt drive with two separately driven carriages **Specifications**

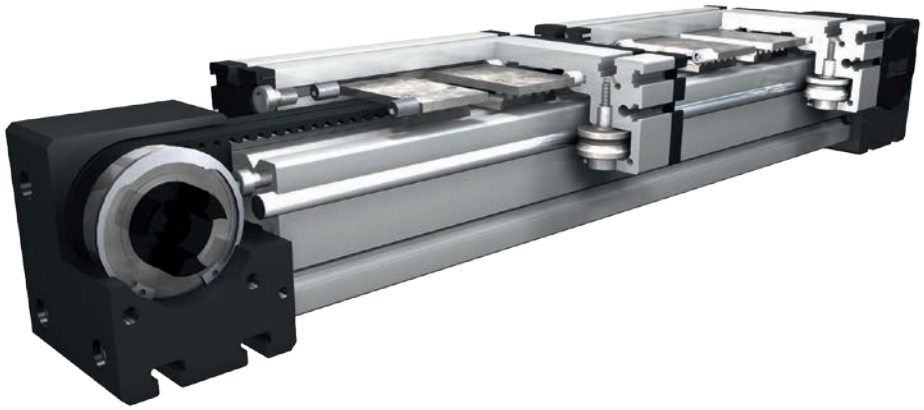

Function:
Same functions as ELZ, but each carriage can be moved separately by its own drive. This unit has twin pulleys, which run on separate bearings, and two independent, parallel drive belts, one for each carriage.

Fitting position: As required. Max. length 4.000 mm without joints.
Carriage mounting: By T-slots.
Unit mounting: By T-slots or tapped holes in the bearing block, mounting sets.
Belt type: HTD with steel reinforcement, no backlash when changing direction, repeatability ± 0,1 mm.

Forces and torques

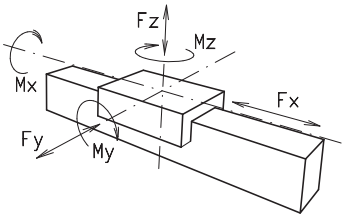

Size	ELZZ 60		ELZZ 60 S		ELZZ 80		ELZZ 80 S		ELZZ 100		ELZZ 125	
Forces/Torques	static	dynamic	static	dynamic	static	dynamic	static	dynamic	static	dynamic	static	dynamic
F_x (N)	298	250	298	250	679	500	679	500	1210	1100	1900	1800
F_y (N)	3000	2000	4100	3100	3000	2000	4600	3600	8000	6500	12000	9000
F_z (N)	1700	1100	2160	1600	1700	1100	3000	2600	3600	2200	6000	4500
M_x (Nm)	67	43	88	65	90	55	170	140	300	230	600	450
M_y (Nm)	90	70	190	140	110	80	270	230	400	270	750	600
M_z (Nm)	120	100	230	170	150	120	300	220	750	500	1350	1150

All forces and torques relate to the following:
existing values / table values: $\frac{Fy}{Fy_{dyn}} + \frac{Fz}{Fz_{dyn}} + \frac{Mx}{Mx_{dyn}} + \frac{My}{My_{dyn}} + \frac{Mz}{Mz_{dyn}} \leq 1$

No-load torque						
Nm	0,6	0,7	0,9	1,2	1,4	1,8
Speed						
(m/s) max	5	5	6	8	10	10
Tensile force						
permanent (N)	298	298	679	679	1210	1900
0,2 s (N)	333	333	746	746	1331	2090
Geometrical moments of inertia of aluminium profile						
I_x mm^4	$6{,}79 \times 10^5$	$6{,}79 \times 10^5$	$18{,}99 \times 10^5$	$18{,}99 \times 10^5$	$44{,}4 \times 10^5$	$101{,}5 \times 10^5$
I_y mm^4	$6{,}97 \times 10^5$	$6{,}97 \times 10^5$	$18{,}97 \times 10^5$	$18{,}97 \times 10^5$	$44{,}8 \times 10^5$	$101{,}5 \times 10^5$
E-Modulus N/mm^2	70000	70000	70000	70000	70000	70000

For life-time calculation of rollers use our CD-ROM or homepage!

Formula: ELZZ
Driving torque:

$$M_a = \frac{F*P*S_i}{2000*\pi} + M_{leer}$$

$$P_a = \frac{M_a*n}{9550}$$

F = force (N)
P = pulley action perimeter (mm)
S_i = safety factor 1,2 … 2
M_{leer} = no-load torque (Nm)
n = rpm pulley (min^{-1})
M_a = driving torque (Nm)
P_a = motor power (KW)

$$f = \frac{F*L^3}{E*I*192}$$

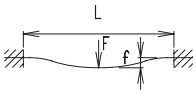

f= deflection (mm)
F = load (N)
L= free length (mm)
E= elastic modulus 70000 (N/mm^2)
I= second moment of area (mm^4)

www.linemodule.ru linemodule@ya.ru Тел. (499) 703-36-05

Positioning system ELZZ 60, 60S, 80, 80S, 100, 125

Dimensions (mm)

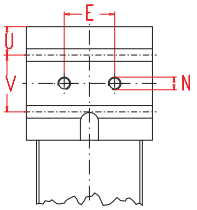

Increasing the carriage length will increase the basic length by the same amount.

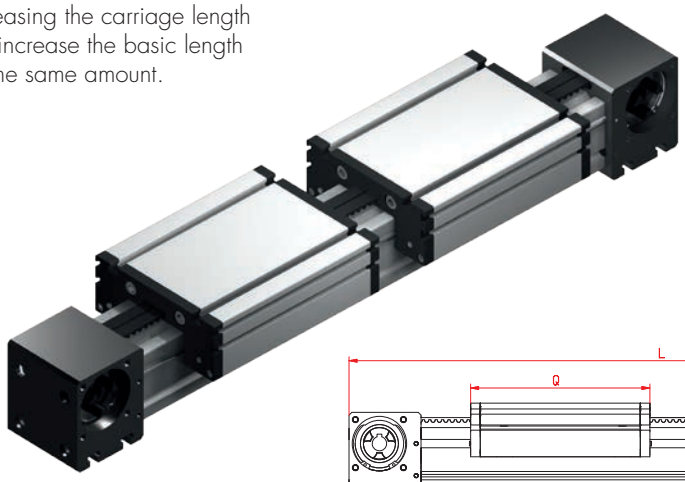

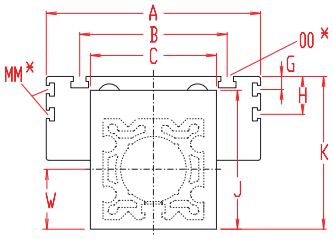

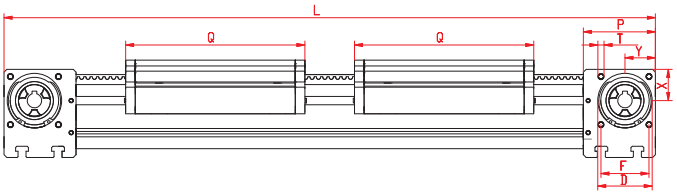

*For slide nuts refer to chapter 2.2 page 2

Size ❒	Basic length L	A	B	C	D	E	F	G	H	J	K	MM for	N	OO for	P	Q	T	U	V	W	X	Y	Basic weight	Weight per 100 mm
ELZZ 60	460	144	96	80	47	30	42	-	-	82	90	-	M 8	M 8	59	168	M 6	15	30	41	27	26	7,4 kg	0,62 kg
ELZZ 60S	510	170	108	80	47	30	42	-	-	82	94	-	M 8	M 8	59	194	M 6	15	30	41	27	26	9,4 kg	0,62 kg
ELZZ 80	570	170	117	100	68	40	60	10	30	110	121	M 6	M 10	M 10	90	194	M 8	22,5	45	51	39	38	12,8 kg	1,00 kg
ELZZ 80S	610	190	126	100	68	40	60	12,5	30	110	122	M 6	M 10	M 8	90	214	M 8	22,5	45	51	39	38	14,8 kg	1,00 kg
ELZZ 100	830	230	155	130	90	50	80	-	29	135	154	M 10	M 12	M 10	110	300	M 10	23	64	65	50	50	33,0 kg	1,60 kg
ELZZ 125	990	295	200	160	110	60	100	-	30	167	191	M 10	M 12	M 12	130	365	M 10	38	50	82	60	60	52,0 kg	2,10 kg

0 **Choice of guide body profile:**
(0) Standard **(2)** corrosion-protected guide rods and screws
(4) expanded corrosion-protected version (depending on the availability of components)

0 **Choice of carriages:**

(0)

(1)

Size	Version 1	
	Q	L
60	184	492
60S	214	550
80	210	602
80S	234	650
100	316	862
125	389	1038

0 **Drive version:**

The standard version is supplied without shaft.

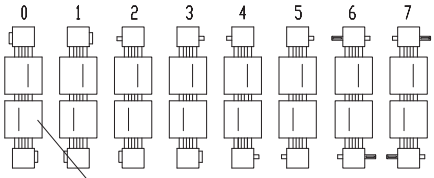

Coupling claw on one side

Standard-shaft[1]

Shaft one size smaller[2]

Belt table

Code No.		Size	Belt	mm/rev.	Number of teeth
0	**2**	**60 (S)**	5M09	130	26
0	**5**	**80 (S)**	8M12	192	24
0	**6**	**100**	8M20	256	32
0	**7**	**125**	8M30	304	38

Shaft dimensions

Size	Shaft ø h6 x length	Key
60 (S)[1]	14 x 35	5x5x30
60 (S)[2]	10 x 27	3x3x25
80 (S)[1]	18 x 45	6x6x40
80 (S)[2]	14 x 35	5x5x28
100[1]	22 x 45	6x6x40
100[2]	18 x 45	6x6x40
125[1]	30 x 55	8x7x50
125[2]	22 x 45	6x6x40

Basic length + stroke = total length

ELZZ	60	4	0	0	0	0	2	1	01500
	Pos.	1	2	3	4	5	6	7	

For combination kits and connecting elements refer to chapter 2.2

Sample ordering code:
ELZZ 60 with standard body profile, standard carriage and coupling claw on one side, 1040 mm stroke